ASSEMBLY

FLOOR LAYING INSTRUCTIONS

BICLICK ACULAY

NOTICE!

In order to eliminate colour discrepancies, during a given investment, it is recommended to use panels from a single production batch for installation. Before the installation, it is absolutely necessary to check
the production batch, whose number can be found on each packaging.

NOTICE!

Before the installation, the panels must be carefully checked for material defects, especially decorative surface defects, mechanical damage of locks as well as colour or gloss discrepancies.
The variety and frequency of structures, wooden rings and knots, the presence of whitened wooden rings or cracks are elements of the design and do not constitute product defects. The installation of panels is regarded as the product acceptance and no damage and/or colour discrepancies as well as design varieties listed above can be the grounds for any subsequent claims regarding the product.

It is recommended that the panels be sorted according to the designs and shades before they are laid, and then the panels must be installed alternately in order to obtain the satisfactory uniform effect of variety in the room area. The panels should always be laid towards the main light source in order to obtain the best possible visual effect.

The open packaging must be used immediately (see-> PREPARATION, section No. 10)

ASSEMBLY

PREPARATION:

temperature: 18-30°C

humidity: 40-65%

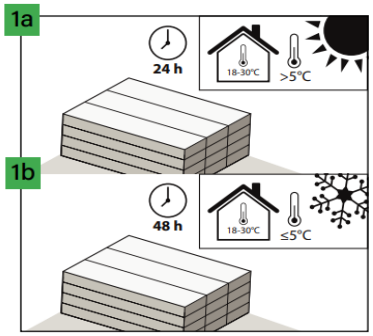

If the temperature is >5 ℃ during transport, the acclimatization time in a room with a temperature of 18-30 ℃ should be min. 24 hours. However, in case of temperature ≤5 ℃ during transport, acclimatization time in a room with a temperature of 18-30 ℃ should be min. 48 hours.

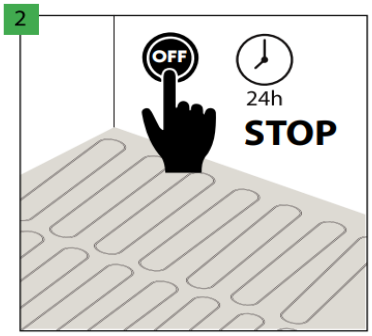

Before installation, turn off the underfloor heating for 24 hours.

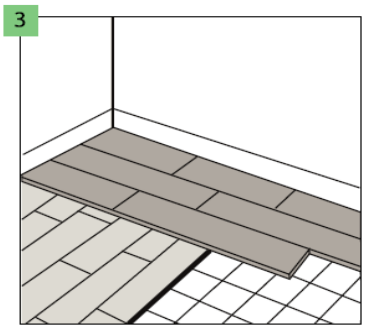

The type of substrate, its quality and preparation, especially any irregularities, have a decisive impact on the final effect.
Panels are suitable for installation on cement and anhydrite floors, selflevelling grouts, on ceramic tiles, glued parquet, glued PVC floor coverings and linoleum as well as floors made of OSB boards or plywood with their lack of deflection and moisture content in wood below 10%. The installation on floating floors such as layered plank and laminated panels is allowed provided that a substrate with the CS = 200 kPa and vapour-insulation barrier with SD >75 m was laid under them
properly. Do not lay the panels directly on fitted carpets and other soft floor covers.
Before the installation, the underlay and the floor cover must always be lined with acoustic-levelling underlay indicated by the guarantor. Failure to lay the underlay or the laying of the improper underlay will
result in the loss of the warranty and high risk of damage to the panels.

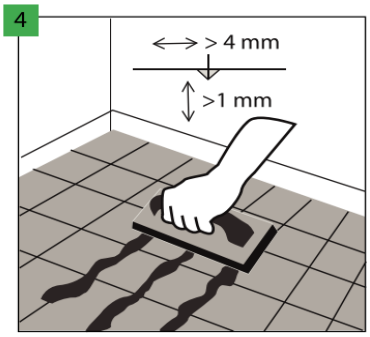

In the case of installation on the substrate covered with ceramic tiles, fill the tile joints with the gap wider than 4 mm and deeper than 1 mm with a durable compound for the filling of points, e.g. resin grout.

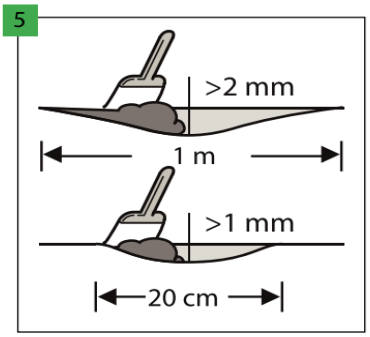

Make sure that the substrate is completely flat. All substrate irregularities exceeding 1 mm, with a length greater than 20 cm, or exceeding 2 mm with a length greater than 1 m must be levelled. Check if the use of the priming or sealing material is necessary. In order to prepare the substrate perfectly, spread the grout or the self-levelling compound on the entire surface.

ASSEMBLY

PREPARATION:

temperature: 18-30°C

humidity: 40-65%

6

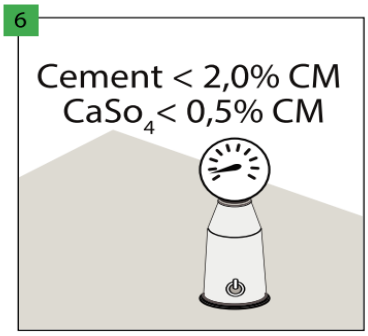

In the case of the cement grout, the moisture content in the substrate must be lower than 2.0%, and in the case of the anhydrite grout, it must be lower than 0.5%. In the case of installation with the underfloor heating, the abovementioned values must be 1.8% and 0.3% respectively.

7

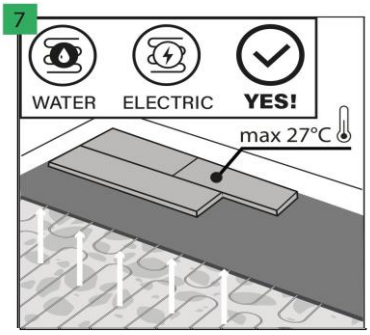

8

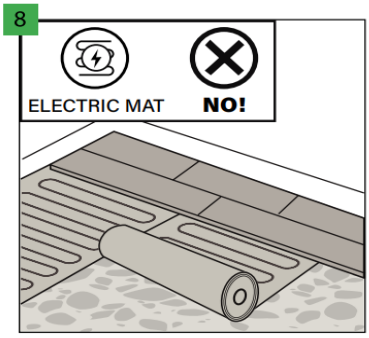

The floor panels may be applied on the substrate with underfloor heating, provided that the maximum temperature of the floor surface is maintained at the level of 27°C. The underfloor heating must be switched off one day before the installation, and after the panels are laid, wait for another day and gradually switch on the underfloor heating (5°C per day). It is allowed to install the floor over the water floor heating or electric floor heating (sunk in the substrate) which guarantee the aforementioned temperature ranges. It is not recommended to perform the installation directly on the electric heating mat.

9

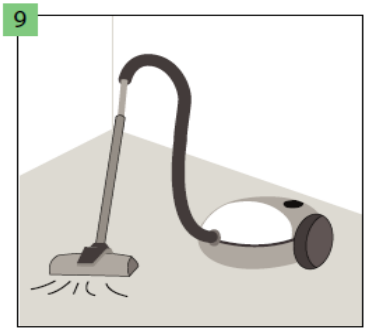

Make sure that the substrate is dry, flat, stable and free of any grease or chemical substances. The protruding irregularities must be scratched off and removed. Before the installation, the ground must be swept and vacuumed carefully so as to remove any contamination. It is necessary to repair any more serious imperfections of the substrate and large cracks.

10

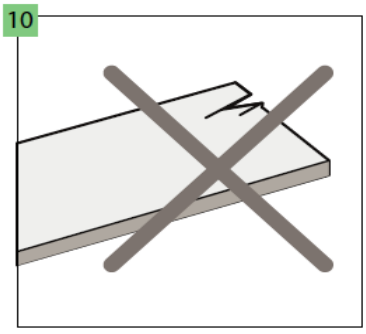

Before and during the installation, control all the panels in the optimal lighting conditions. Do not use defective panels.

ASSEMBLY

PANEL LAYING:

temperature: 18-30°C

humidity: 40-65%

subfloor min. 15°C

1

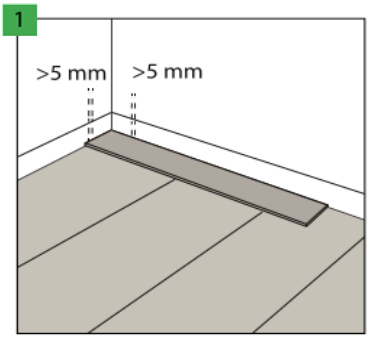

Leave 5 mm of perimeter space at the walls to allow the floor expansion. The maximum surface which can be laid without additional expansion joints is 200 m2. Above this surface, apply an additional expansion joint and enlarge all the expansion joints up to 10 mm. The maximum length of the floor surface in one direction, which can be laid without additional expansion joints is 20 m. Above this length, apply an additional expansion joint and enlarge all the expansion joints up to 10 mm.

2

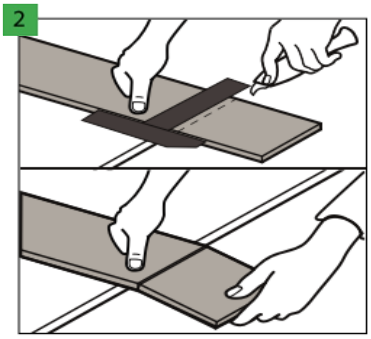

For additional cutting of floor panels, use a sharp knife, cut the top layer, then break the panel dynamically by leaning it on the edge. The floor panels may also be easily cut using an electric saw.

3

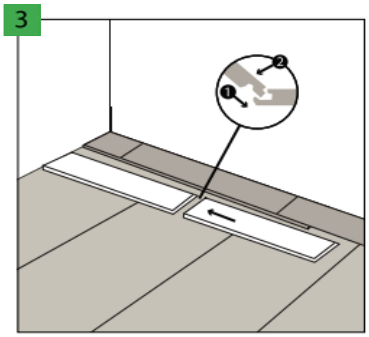

The floor panels are provided with locks on the short and long side. First, join the short sides of the neighbouring panels together.

4

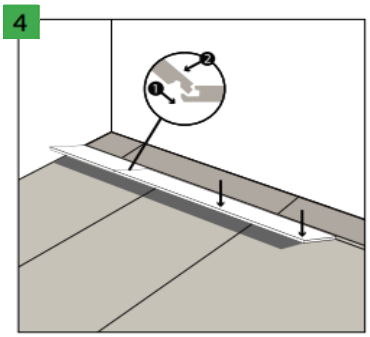

Then, snap the ribbon on to the previously laid rows with the long side. NOTICE! For persons skilled in installation, the second method of joining the panels is recommended: install each panel successively to the one that has been laid previously. For this purpose, the panel lock must first be snapped on its short side, lower the panel along the long side leaving a narrow gap, then lift the panel slightly to the angle between 20 and 25° to snap the lock on the long side. This activity must be repeated with another panel.

NOTICE!

The panels must overlap each other
- at least 30 cm, the extreme rows of panels must be at least 10 cm wide.

ASSEMBLY

FLOOR FINISH:

temperature: 18-30°C

humidity: 40-65%

1a

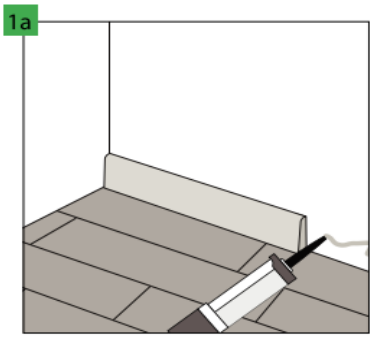

1b

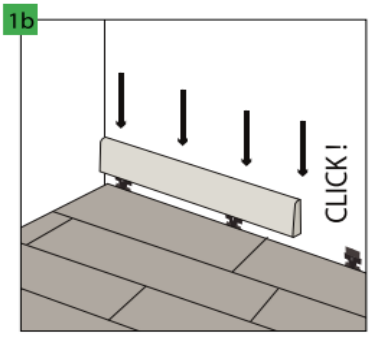

Expansion joints along the walls must be covered with a decorative strip, assembling it by means of glue or special clips. It is recommended to use the Afirmax strips dedicated to a given panel, which guarantee the excellent colour match and the coat resistant to scratching.

2

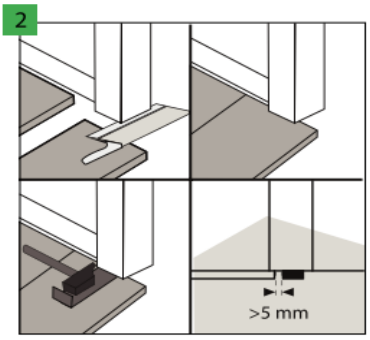

At the doors, it is recommended to undercut the profiles of door frames and leave free space over the installed panel so as not to limit its possible movement.

3

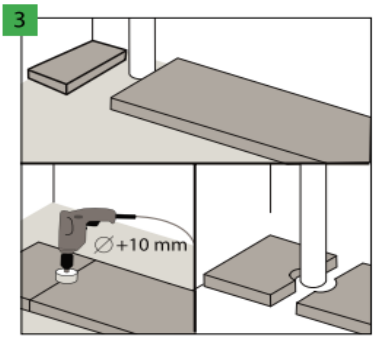

In the case of vertical pipes embedded in the substrate, leave free space around the pipes. Holes for the pipes must be drilled with a drill bit with a diameter that is bigger than the pipe diameter by 5 mm.

4

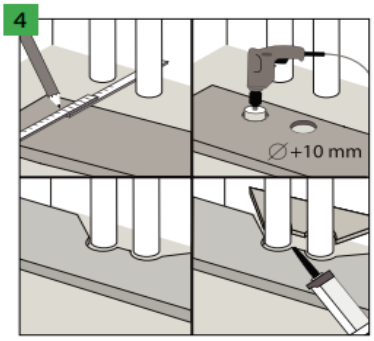

Act similarly in the case of a bigger number heating system pipes. The cut panel elements must be joined with the assembly adhesive for plastic elements.

5

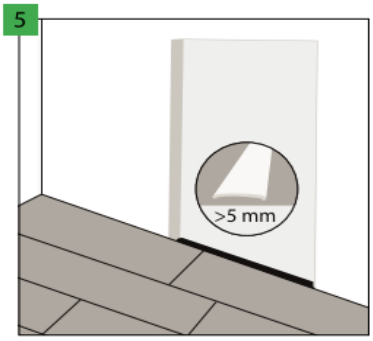

The application of the 5 mm expansion joint in the door opening between the rooms, which allows for the elimination of stresses, is recommended in the following cases: the irregular shape of the floor surface in the neighbouring rooms or the application of the underfloor heating only in one of the joined rooms or if underfloor heating is in both rooms but with individual temperature regulator. In the case of an area bigger than 200 m2 or longer than 20 m, the expansion joint must be enlarged to 10 mm.

6a

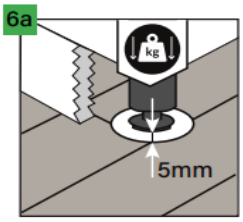

6b

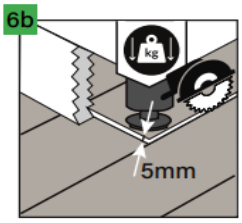

6c

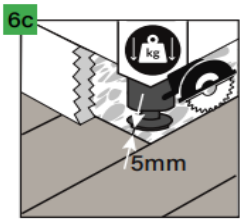

In the case of any heavy objects placed on the floor (such as kitchen furniture, kitchen island, built-in wardrobes and other furniture permanently attached to the wall), 5mm expansion joints should be left around them. We recommend the following ways to preserve expansion joint spaces:
6a. Cutting a hole "for legs" in the floor enlarged by 5mm on each side, so as to maintain the expansion joint.
6b. Cutting the floor with a saw and making a 5mm expansion joint along the furniture.
6c. Finishing laying the floor in a suitable distance (5 mm on each side) from a heavy object.

ASSEMBLY

USE AND MAINTENANCE:

temperature: 18-30°C

humidity: 40-65%

1

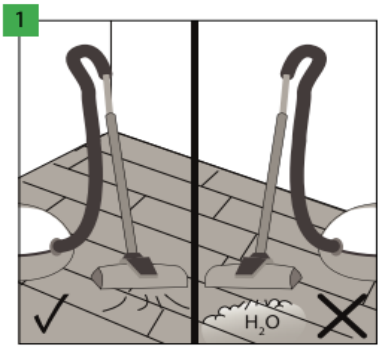

The Afirmax floor may be cleaned with a vacuum cleaner, however, it is prohibited to use steam cleaning devices.

2

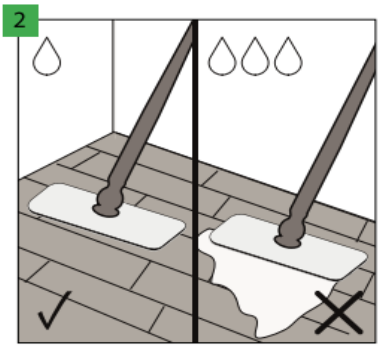

The Afirmax floor may be cleaned with a damp mop.

3

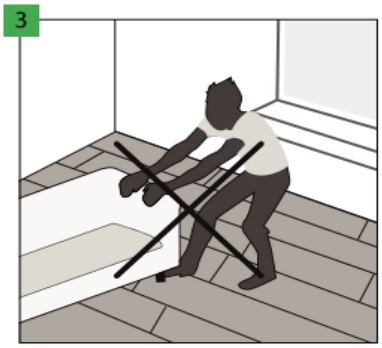

The movement of heavy objects along the floor is not allowed. They must be moved only after they are lifted.

4

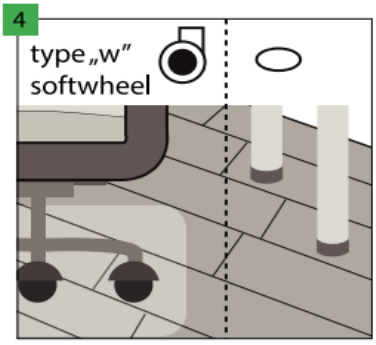

Used office chairs with W-type castors, protecting the floor additionally by means of the protective net. The furniture legs must be provided with protective pads which provide protection against scratching, e.g. made of felt.

5

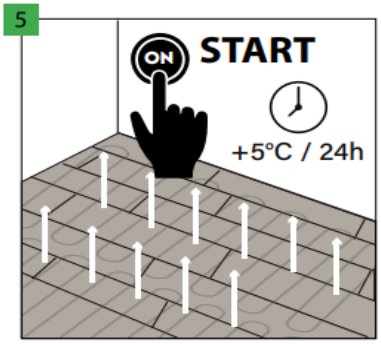

After laying the floor and waiting 24 hours, you can turn on the underfloor heating, remembering to gradually increase the temperature (5°C per day).
ATTENTION! It should be remembered that the maximum temperature of the floor surface is 27°C.